UP THE HOLLER

Newsletter of Division 9
THE COAL DIVISION
MID CENTRAL REGION NMRA INC
March 2019

DIVISION OFFICERS

Superintendent
Dan Mulhearn
304-466-9188
super@coaldivision.org

Assistant Superintendent
Robert Osburn
asstsuper@coaldivision.org

Clerk– Jerry Doyle
304-638-2826
clerk@coaldivision.org

COMMITTEE CHAIRS

Achievement Program Chairmen
Ed Keith MMR
740-867-5264
Bob Weinheimer MMR
304-343-1428
ap@coaldivision.org

Clinic
Sam Delauter
clinic@coaldivision.org

Contest
Dale Osburn
contest@coaldivision.org

Education
Vacant

Election
Bill Wadsworth
304-768-3266
nominating@coaldivision.org

Membership
John Harris
membership@coaldivision.org

Raffle
Tom Harris
raffle@coaldivision.org

T-Trak
Sam Delauter
samdelauter@gmail.com
304-377-1136

DIVISION STAFF

Editor
Bob Weinheimer MMR
editor@coaldivision.org

Webmaster
Bob Weinheimer MMR
webmaster@coaldivision.org

FROM THE HEAD OF THE HOLLER
Dan Mulhearn, Superintendent

What a great weekend! I got to spend Saturday and Sunday at the Kanawha Valley Railroad Association train show. Many thanks to Bob Weinheimer for offering me the hospitality of his home Saturday night. Thank you also to the members of the Division who donated their time staffing our booth and selling raffle tickets. It was great to see our group's T-Trak modules up and running, and very smoothly it must be said. It was certainly worth the trip.

It's that time of year to start thinking about making sure the lawn mower will start and yard work looms. However, leave yourself some train time, it's always rewarding. I now have two T-Trak modules, one two foot and one four foot. I just got my engine house and the fuel and water gantries as well as sand towers for my proposed engine terminal facility. After seeing the modules on display this past weekend, I certainly have my work cut out for me.

It won't be long until we find ourselves at our Region convention in May. I am looking forward to getting together with old friends and new. If you've never gone to a convention, you should try one. Then, in July it will be off to Salt Lake City for the National. I already have my Amtrak ticket, but may decide to drive out and do a little touring after the Convention.

As always, I am looking forward to our next Division meeting at the depot. It is always a good time in good company. Hope to see you there.

Saturday March 9, 2019

NOTE THE NEW WINTER MEETING TIMES AGREED TO AT THE DECEMBER MEETING:

12:00 - Depot open
Buy raffle tickets, etc.
Socialize
Contest: Diesel Locomotives
1:00 - Superintendent's Briefing
1:30 - MADD Discussion of Diesel Engines
1:45 - Raffle results, contest results
2:00 - Clinic: Sam Delauter will discuss T-Trak

FROM THE OFFICE DOWN THE HALL
Bob Osburn, Assistant Superintendent

What a busy but great weekend we just finished during the Kanawha Valley Model Railroad Show in the Arena Event Center at Saint Albans on February 23rd and 24th. The attendance was amazing, the facility was great, food good, and the weather even cooperated, but most of all the support from so many members of Division 9 made the weekend special.

This was the first time the event was held at the Saint Albans Event Center, formerly being conducted at Coonskin Park. The Kanawha Valley Railroad Association was very supportive and supplied us with a great area to represent Division 9.

Friday evening found several of us bring in materials, arranging tables for the T-Trak display, and John Harris overseeing the assembly of the Division display. During the show, I believe we had a record number of people show interest in the NMRA, asking for membership applications, and acquiring about Division 9 meetings. The scenery in progress display was also a big success with many attendees asking questions and commenting on how the process is accomplished. Thanks to John Harris, Dan Mulhearn, Bob Weinheimer, Dale Osburn, Herb Parsons, and Jesse Smith for manning the Division 9 booth during the show.

Saturday morning we were busy getting the T-Trak modules up and running. Sam Delauter, Herb Parsons, Bob Weinheimer, Carson Schoen, Dale Osburn, John Shuman, and I contributed modules for the layout. A special thanks to Bruce Demaeyer from the Division 10 group who brought several modules to add to the display, solved some small problems we had, and answered questions about T-Trak all weekend long. One of the highlights for us was watching Carson running trains for 2 days, showing people details on the modules, and seeing the enthusiasm he had for helping with the display.

John Harris and Bob Weinheimer gave clinics during the show covering scenery techniques and decoder installations. Sam Delauter, Ed Keith, and Greg Barker had vendor booths, the Wilsons and John Shuman had model railroad displays, Larry Richards and Dale Osburn displayed some of their modules, and Jesse Smith had a beautiful display featuring his scratch built turbine coaling tower as well as a C&O M1 being refueled. It was also nice to see Matt Crouch helping with a display representing the C&O Historical Society.

The raffle also went very well. Many tickets were sold and we let a representative from the KVRA group draw the winning ticket at the end of the show Sunday. The winner of the layout kit was Ira Gillespie from the Appalachian Model Railroad Society.

Many other Division 9 members were present during the show hoping to purchase something special and observing the many very nice layouts. It was really great to see a large representation of members. I would like to thank everyone who attended and extend thanks to the Kanawha Valley Railroad Association for a great weekend.

CLINICS
Sam Delauter, Clinic Chair

At the Kanawha Valley Railroad Association show, Bob Weinheimer and John Harris presented clinics. On Saturday of the show, John presented a clinic on scenery techniques based on our diorama of scenery from start to finish. Later in the day and again on Sunday, Bob Weinheimer gave a clinic on installing a DCC decoder in older locos. Thank you both for giving these clinics and representing the NMRA well. At the March meeting, I will be giving a T-TRAK clinic.

MONTHLY MODEL CONTEST
2019 SCHEDULE

January	Modeler's Choice	August	Freight Cars
February	Steam Locomotives	September	Photo, Model or Prototype
March	Locomotives Other Than Steam	October	Open Loads (flats, gondolas, hoppers)
April	Cabooses	November	Passenger Cars
May	Anything Steel Related	December	Third Annual Gary Burdette Memorial Modeling Challenge. Details and kick off in October
June	Non Revenue Except Cabooses		
July	Structures		

Coal Division
Monthly Railfun Event
"Diesel Locomotives"

Saturday March 9, 2019

NOTE THE NEW WINTER MEETING TIMES AGREED TO AT THE DECEMBER MEETING:

12:00 - Depot open
Buy raffle tickets, etc.
Socialize
Contest: Diesel Locomotives

1:00 - Superintendent's Briefing

1:30 - MADD Discussion of Diesel Engines

1:45 - Raffle results, contest results

2:00 - Clinic: Sam Delauter will discuss T-Trak

NMRA MCR DIVISION 9
THE COAL DIVISION

St Albans Depot
St Albans, WV
February 9 2019
Minutes

Meeting was called to order at 1:04 p.m. by Superintendent Dan Mulhearn.

Minutes of the previous meeting were approved as published in the newsletter.

Treasurer's Report - No report.

Superintendent's Report - Dan Mulhearn welcomed everyone to the meeting. He stated that he would like to have members report on how they modeled different aspects of their layout for the upcoming newsletters.

Assistant Superintendent's Report - Robert Osburn stated that the depot was vandalized two weeks ago. Repairs were made to secure the building. Additional repairs will need to be made to the plumbing and to also secure the facility in the upcoming months.

Newsletter Chair - Bob Weinheimer thanked Tom Harris for his signaling system series for the newsletter. He also stated that three (3) more issues will be in the upcoming newsletters. Could use more content for the newsletter.

Achievement Program Chair - Robert Osburn was awarded Association Volunteer Certificate.

Library Chair - No report.

Contest Chair - Dale Osburn asked that anyone entering models in the contest should include:
Modeler's name, title of entry and 2 - 3 lines written description. Time will be provided for anyone who would like to speak about their entry. If interested, please contact Dale Osburn prior to meeting. March contest will be Locomotives other than steam.

Clinic Chair - Sam Delauter asked if anyone would be interested in providing clinics at the train show in St. Albans on February 22nd and 23rd. There would need to be two (2) clinics per day. Sam also talked about upcoming shows for the T - Trak special interest group.

Raffle Chair - Tom Harris reported that there were several items up for raffle today and encouraged everyone to buy tickets.

Membership Chair - John Harris reported that he will be ordering new name badges in the next few weeks. Anyone who needs a name badge should contact him directly. John also talked about the upcoming Rail Fan Trip scheduled on June 8th. A signup list was being sent around today to see how many would be interested. This trip is not only for members but anyone that would like to go on the trip with a member.

Old Business - None

New Business

- Robert Osburn asked if tables would be needed at the St. Albans show. Per Sam Delauter, tables will be provided.
- John Harris will be bringing Coal Division banners and information to the St. Albans show.
- Robert Osburn made a motion to sell tickets at $5.00 each at the St. Albans show for the donated layout. This was approved. Robert stated that he would provide tickets for the raffle.

Sam Delauter made a motion to remove items 2 and 3 from the Division 9 T-Trak membership requirements. This was approved (see handout for more information on the T-Trak Special Interest Group).
Announcements - There will be a train show at the Kyova Mall on March 16th and 17th.

Next Meeting - March 9th at St. Albans Depot.

The meeting was adjourned at 1:35 pm.

Respectfully submitted by Dale Osburn, Acting Clerk

CONTEST
Dale Osburn

First place at the February contest went to Herb Parsons for his donkey steam engine. Second was Jesse Smith for his O scale steam engine. Third place was a tie between Larry Richards for his engine conversion and Sam Delauter for his PRR L1s Mikado.

The March contest is locomotives other than steam. This usually means Diesels but electric locomotives also fit in this category. Looking ahead, April is cabooses and May is anything steel related.

Please remember to bring a written description of what it took to build your model so the members can appreciate the effort involved.

N Scale Donkey Steam Engine by Herb Parsons

Built from a Details Associates kit using ACC glue to assemble. The skid was assembled per directions then given an India ink and water wash then painted with Tru Color dust to give it a dried mud look. The boiler and engine were painted black using Testors flat black. Brown sewing thread was used to make the cables in the reels. Dry brushed Tru Color rust was used to give an in use look.

O Scale 0-8-0 and Display by Jesse Smith

Greig Goodall weathered this MTH locomotive, Jesse built the scenic module.

0-6-0 Tank Engine to 2-6-0 Mogul by Larry Richards

All parts above the frame were replaced with a new scratch built boiler and cab. Detail parts are brass to add weight. The boiler is ABS plastic tube with styrene bands. The steam dome is from the original engine and was sanded to the new radius and used. The cab is scratch built from styrene. The frame was extended to make room for an N scale wheelset to convert the engine to a 2-6-0. The tender used N scale wheelsets and coupler, all else was scratch built of 0.010" styrene and wire. The fuel is oak.

Pennsylvania L1s Mikado #9115

I built this Pennsylvania RR L1s Mikado using a Kato mechanism and a GHQ conversion kit. The original shells were removed and new shells were assembled. They are made of pewter and have many pewter and brass parts. Many holes must be drilled with a #80 drill bit so the parts can be glued to the shell. After the shell was assembled, the chassis was modified to fit the new tender and boiler shells. After the loco was assembled, it was airbrushed with PRR DGLE and then weathered.

PASSENGER MANIFEST
John Harris, Membership Chair

Let me first thank all those members who volunteered to man the Division 9 booth at the recent KVRA Train Show. The event was quite successful from my perspective as we had several inquiries from potential members. Perhaps just as important, there were lots of trains to be seen and had. I'm sure some of the traffic by the booth was due to the raffle and T-Track modules but I will leave it to others to comment on both. Suffice it to say "well done" to all those involved. We look forward to possibly expanding the Clinic offerings next year and perhaps even some hands-on demonstrations.

Excitement continues for the Rail Fan trip to Elkins on the Durbin and Greenbrier Valley Railroad for our June 8th meeting. We will be taking reservations starting at the meeting next month and continuing to May meeting. Payment will be due at that time in order to hold space and guarantee the Parlor Car. Remember, this too would be a good chance to invite friends and other rail road modelers that could be potential NMRA members. Regardless, it should be a fun time for all.

For those who have ordered new name badges, I expect to have them for distribution at the March meeting. Future orders always possible.

MY WORD
Bob Weinheimer, Editor

The other columnists did a good job of describing the KVRA train show so they leave me with little to say. After seeing the group deal with the small Coonskin Lodge for many years, it was good to see a much larger show in a much better location. While I am sure there were some bumps along the way, next year things will be even better yet.

The Mid Central Region convention is fast approaching, almost like its name: The Bullet. The folks in Division 1 are working very hard to put on a good show. If the location, Boardman, Ohio, doesn't sound familiar, that may be because it is a suburb of a more familiar sounding place: Youngstown. The area is rich in industrial history and there will be prototype tours that should be most informative. Check it all out at www.div1-mcr-nmra.org/the-acy-bullet-2019

Part 2 of the article about signals by Tom Harris starts on page 11 in the electronic version of this issue. If you are looking at the printed version, the complete electronic version can be found at www.coaldivision.org/UTH_201903.pdf.

T-Trak Update
Sam Delauter

The Kanawha Valley Railroad Association Train Show was February 23rd and 24th. The Coal Division T-Trak SIG was in attendance. The layout was 10'x9' and consisted of modules by both NMRA Division 9 and Division 10 from Lexington. Bruce DeMaeyer was kind enough to attend the show both days and brought quite a few very nicely done modules to add to our setup. The modules ran well all weekend and the operators seemed to have a lot of fun running trains.

With the KVRA show behind us, we have the opportunity to both look to the future and to assess the past year. As of writing this article, it has been about a year since this group was formed. We have made a ton of progress in the last year. A year ago there was no T-Trak in our division of the NMRA and also no group dedicated solely to N scale. For that matter, we were able to pull in some guys from other scales. At the KVRA show, we had a good turnout with the modules and the majority had nicely done scenery.

Looking to the immediate future, there are a couple of shows coming up which we will be discussing at our meeting. We will be talking about the regional convention in Boardman, OH and also the Appalachian Model Railroad show March 16 and 17.

I'd like to thank the members of the Special Interest Group and Bruce DeMaeyer for not only making it a success but also making the KVRA show a success. I would also like to thank Tom Harris for painting our backdrops, they really made our modules look great.

We have made so much progress in the last year. Let's keep the momentum rolling.

ACHIEVEMENT PROGRAM
Bob Weinheimer MMR©

.It was a great pleasure to present the Association Volunteer Achievement Program certificate to Bob Osburn. After a few years as clinic manager and two more as Assistant Superintendent it turned out he had more than enough time units to qualify. Recent changes in the Achievement Program management have greatly increased the speed with which certificates are issued and their recipients recognized. If you think you may be close to earning one, let me know. If it is something like a car, locomotive, or structure bring it to a meeting so we can evaluate it. If it's not portable, we can make a house call. The whole idea is to get members working on projects that will improve their skills.

Bob Weinheimer presents Bob Osburn with his Association Volunteer certificate.

Coal Division at the KVRA Train Show
Photos by Dale Osburn except as noted

John Harris works the crowd at the Division booth

Coal Division T-Trak Manager Sam Delauter

Mid Central Region T-Trak Manager and Division 10 member Bruce DeMaeyer, in the background, built the module with the church scene

Jesse Smith brought his scratch built O Scale model of the Hinton coaling tower for refueling the steam turbine locomotives as seen here

Bob Osburn's Shell Distributor module

Coal Division at the KVRA Train Show
Photos by Dale Osburn except as noted

Here are two one foot modules. The one to the left is by Herb Parsons and the one to the right is by Sam Delauter

Bob Weinheimer shows how to install a decoder into an Athearn blue box locomotive.

To the left is Bob Osburn's Starlight Drive In Theater module.

To the right is Bob Osburn's Ace Laboratory module.

Dale Osburn's Water Street Freight Terminal

The last activity at the show was the drawing for the Woodland Scenics layout kit. Bob Osburn presents winner Ira Gillespie with the prize. Photo by Bob Weinheimer.

NMRA Mid Central Region
May 2 - 5, 2019 Convention
Boardman, Ohio

Layouts Clinics Contests Vendors

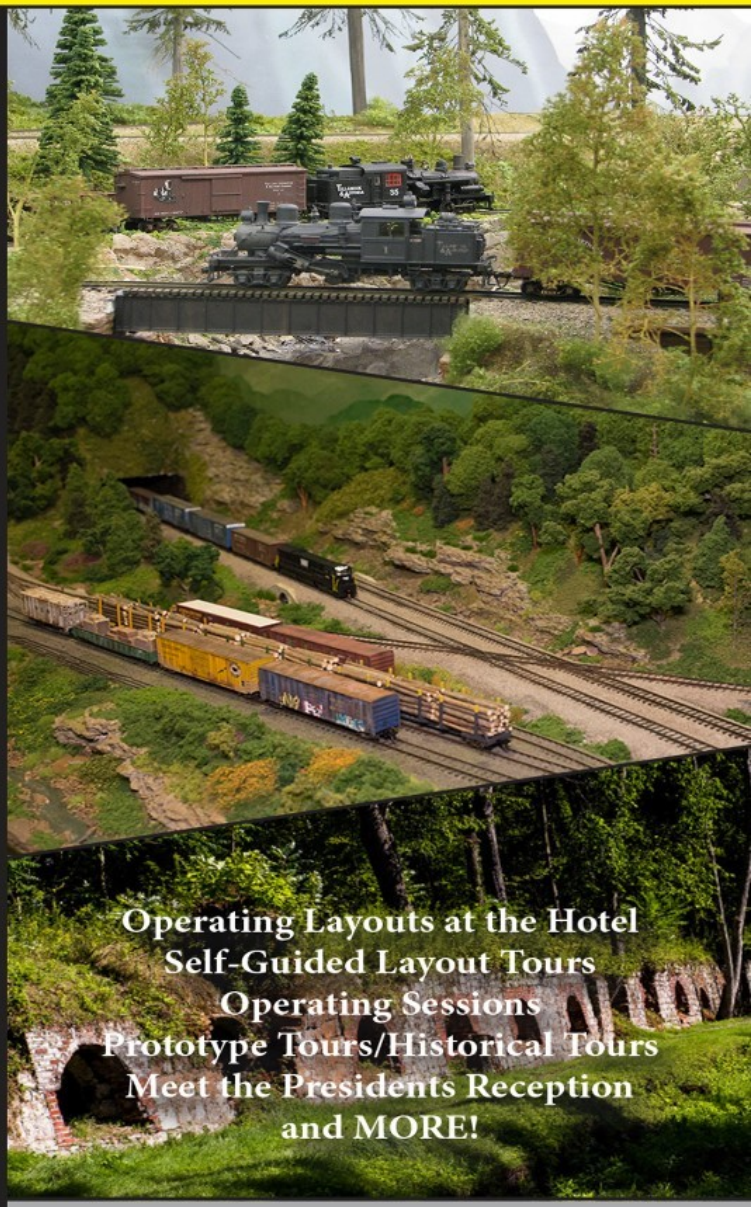

https://www.div1-mcr-nmra.org/the-acy-bullet-2019

NMRA Division 1 MCR

Getting the Signals Lighted
Tom Harris

It will most likely be necessary to build up your own signals to properly signal most model railroad track plans. It is highly unlikely that a ready-to-use signal bridge can be found for the situation above.

Congratulations, I assume you have now assembled the hardware for all of your signals. I will make no attempt here to describe how best to construct the signals, I'm sure the instructions that came with your kits or components were adequate for the job. Instead, I will discuss the items needed, and the wiring necessary, in order to make the signals light.

When constructing lighted signals it is usually necessary to snake the wires feeding each of the lights through small diameter tubes, which form the masts to which the signal heads are attached. You will need to use very tiny wires in order to manage this feat. Very fine-gauge magnet wire will generally do the trick. Even so, the number of wires to be snaked through each tube must be kept to a minimum. As the tubes in question are normally made of brass, it is convenient to use the tube itself as the common conductor for all of the lights. The lights in question will normally be light emitting diodes. (LEDs for short) You can solder one lead of each LED directly to the mast, thereby leaving only one wire for each LED to run down the tube. Just be sure all of the LEDs are aligned in the same configuration. Electricity passes through an led in only one direction, so any led attached in reverse from its mates will not light when power is later applied.

12 volt DC power source

Fine gauge magnet wire

Terminal strip suitable for signal hookup

I realize that the majority of modelers currently using Tortoises, or other similar stall motors, operate their turnouts are using a traditional positive, negative, no ground, DC power source. This, of course, this works very well. So why, you may ask, am I so set on recommending a three pole power source? My reason is that in a later stage of signal development I will look at the process of centralizing signal control into one location by way of a CTC-like control panel for your dispatcher. If you have a larger railroad, you will likely be interested in doing this. Using a +6volt, -6volt, ground, power source will allow your dispatcher to operate mainline turnouts with a single wire run for each switch or crossover between the CTC-like machine and the control point wiring. Take my word for it, when the time comes for this, there will be plenty of wires to run. Notice the terminals of the pictured Tortoise switch motor, labeled as we will be using them.

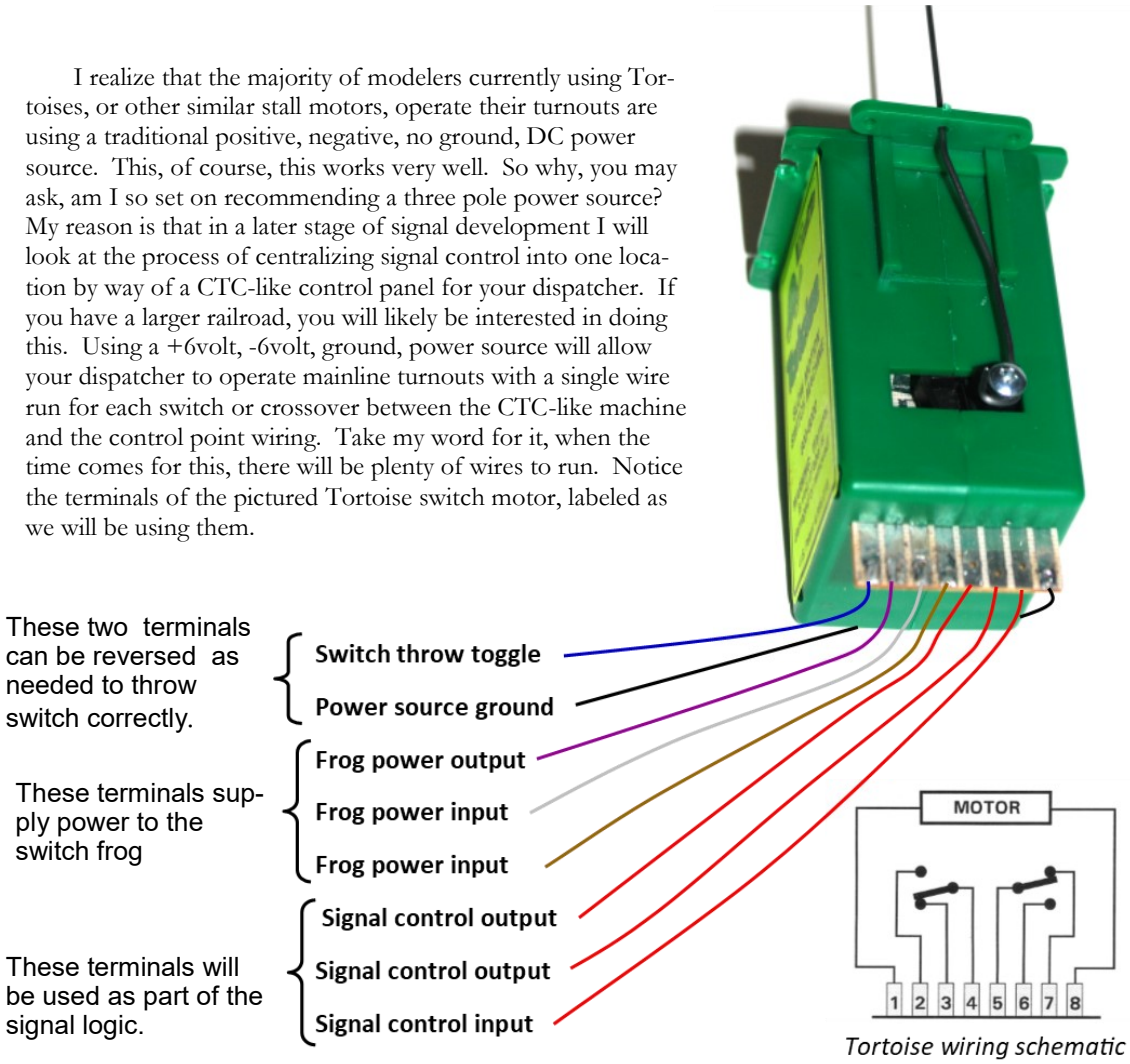

Tortoise wiring schematic

I will next detail the wiring of each of these three systems controlled using the Tortoise contacts in detail. I expect many of you already have a handle on a good deal of this, but I do wish to be complete. Bear with me and just pass over anything that is not useful to you. For the sake of simplicity I will cover one system at a time.

Single throw, double pole toggle switch

Wiring schematic for this toggle switch

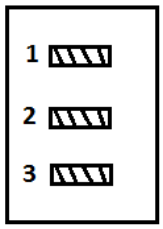

Note that when the toggle is thrown up, the two lower terminals are connected. When the toggle is thrown down, the two upper terminals are connected.

First priority is to get those turnout points throwing. I like to use a double pole toggle for this task, though any other type of continuous switch motor may be used. A toggle with just one set of contacts will work well for this job, but be aware that in future, more sophisticated phases of your signal system will call for more contacts, so keep things easily removable. Not to worry, even then, there will be uses for these toggles, they will not be wasted. Here is a diagram of the wiring that will operate your turnouts utilizing the three terminal power source we have previously discussed.

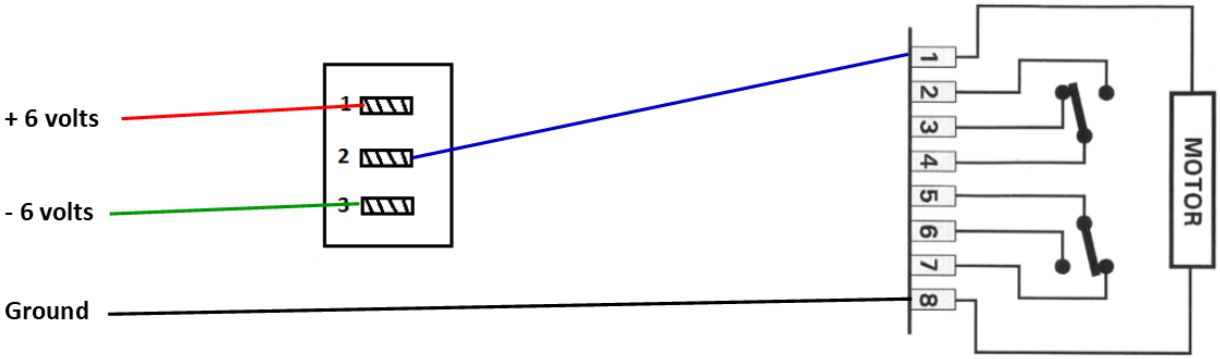

The above wiring should make your points throw. Pretty simple, really. Should they throw backwards, Reverse the red and green wire to the toggle, and all will work properly. I like to mount the toggles on my layout fascia where they will be handy, but a control panel is another option. One toggle will also throw both sides of a crossover if wired as shown below.

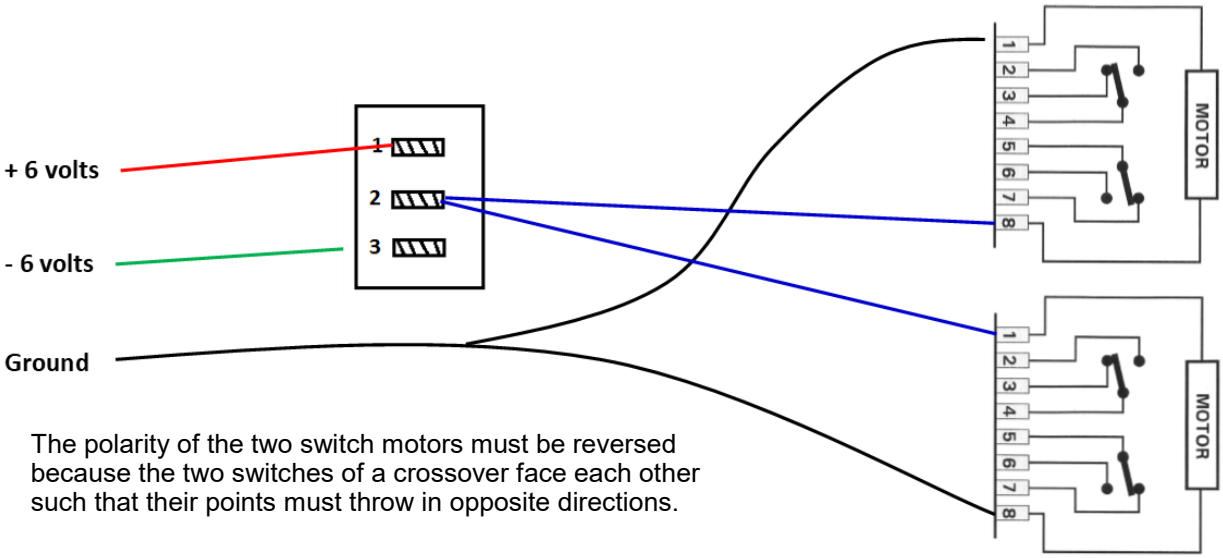

The polarity of the two switch motors must be reversed because the two switches of a crossover face each other such that their points must throw in opposite directions.

The second wiring task to tackle is to provide power to your switch frogs. If you don't do this already, I highly recommend it, the practice greatly aids locomotives passing through your turnouts to avoid stalling. Many older commercial turnout products have plastic frogs, these should certainly be avoided. A large number of the commercial products currently available are actually manufactured with powered frogs. Most turnouts labeled as DCC friendly fit this description. If yours do not you can use some of the extra contacts on the Tortoise to accomplish this. The first step in doing so is to create electrical gaps in your rails beyond the two rails extending from the frogs. Then drop a wire soldered to the frog to the underside of your layout for wiring. The point where your commercial switch connects to the track sections beyond is a convenient place to create these electrical gaps, simply employ plastic rail joiners.

Now for the actual wiring:

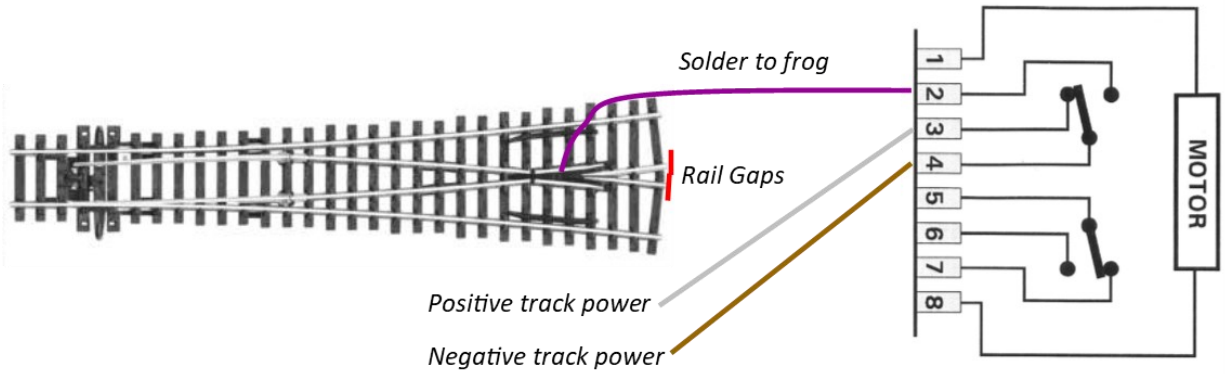

It is important to have the electrical polarity of the frog match the polarity of the rail the switch points it is aligned with. This can be checked by using wires with alligator clips on both ends to temporarily connect the wiring, then using a meter to check for shorts. I employ an even easier method for making the track power connections correctly. I use DCC and have sound equipped locomotives. I place one truck of such a locomotive on the frog being wired, and the other truck, on normal, previously wired, adjacent track. I then power up the locomotive in idle so I can hear it rumble. Once ready, I go to work under the railroad making my connections. If the locomotive stops talking to me, I know I have wired a short, and reverse the leads. If the locomotive keeps on rumbling I know my connections are correct. At this point the turnouts should work and your trains should pass through them. On to the next step, lighting those signals up.

With this phase complete the signals will be lighted and mean something, but not yet work prototypically.

It is time to get those signals lighted. In this phase of signal system installation we are not going to try and make the signals work in a prototypical manner. That will be another, even larger wiring project. For now let's just get them going with some simple, quick wiring. The signals then can be enjoyed as scenery, and pretty neat scenery at that. Moreover, they will change indications and have meaning for operators even now.

What I propose doing is to make use of the second set of contacts on the Tortoise motors to light the signals, and to change their indications in response to whether the turnout is open or closed. When done an operator seeing a clear indication will know the turnout is set to route his/her train straight through the turnout. A diverging approach indication will indicate the turnout is going to route the train onto a diverging route. A red (or stop) signal aspect will unequivocally tell the operator the turnout is set against the train and that the train must be stopped short of the signal. This is definitely <u>not</u> how prototype signals work, but it is something. To implement this temporary mode of operation wire as shown.

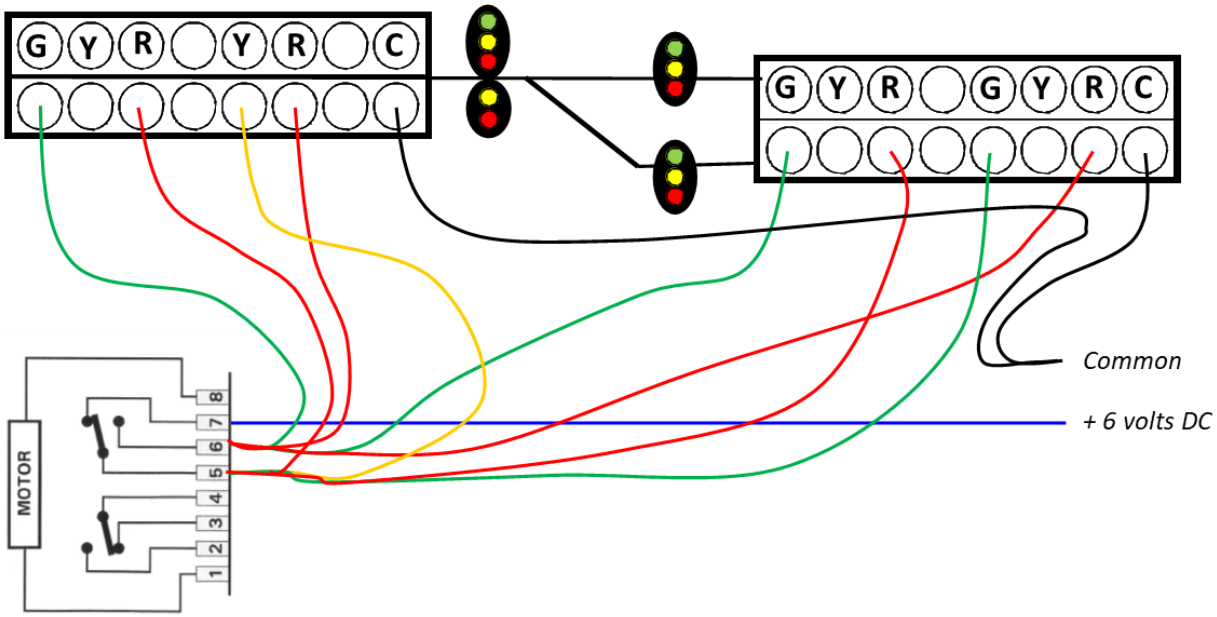

You can see why I elected to show the wiring of only one system at a time, this does get to be a lot of wires. What we are doing here is sending power to the green (or yellow) LEDs corresponding to the routes that are available when the turnout is set normally. It sends power to the red LEDs in the heads which correspond to unavailable routes. Throw the switch, and the pattern of green and red signals reverses. Study the diagram, and you will easily see how it works.

The following wiring diagram shows how this logic can be expanded to work for a more complicated situation; in this case, a crossover.

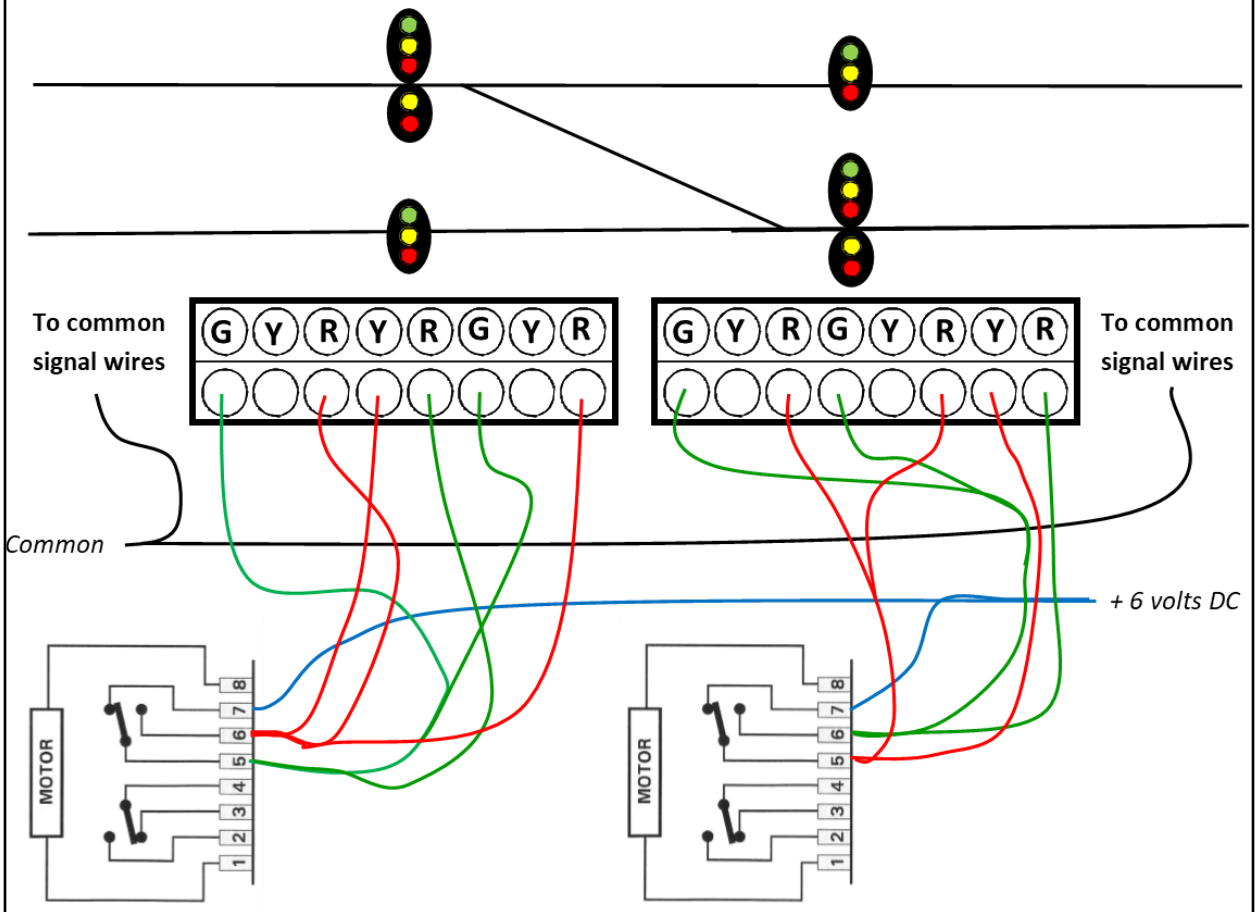

Once again, this is a lot of wires, but if you study things carefully you can see what is being accomplished. Please note the connections for the turnout positions are reversed between terminals 5 and 6 for the two switch motors. This is because the turnouts they control face in opposing directions. I order to open the entire crossover one motor throws to the right while the second motor must throw to the left.

It will not be possible to show a wiring diagram for every situation and for all track plans, but once you get to understand how the thrown/not thrown logic works, it should be possible to work out how to use it for any situation you might encounter. For my final wiring example, I will apply this logic to an even more complex situation, a double crossover.

To simplify things I will use three diagrams to show different parts of the double crossover wiring. First, the power supply wiring.

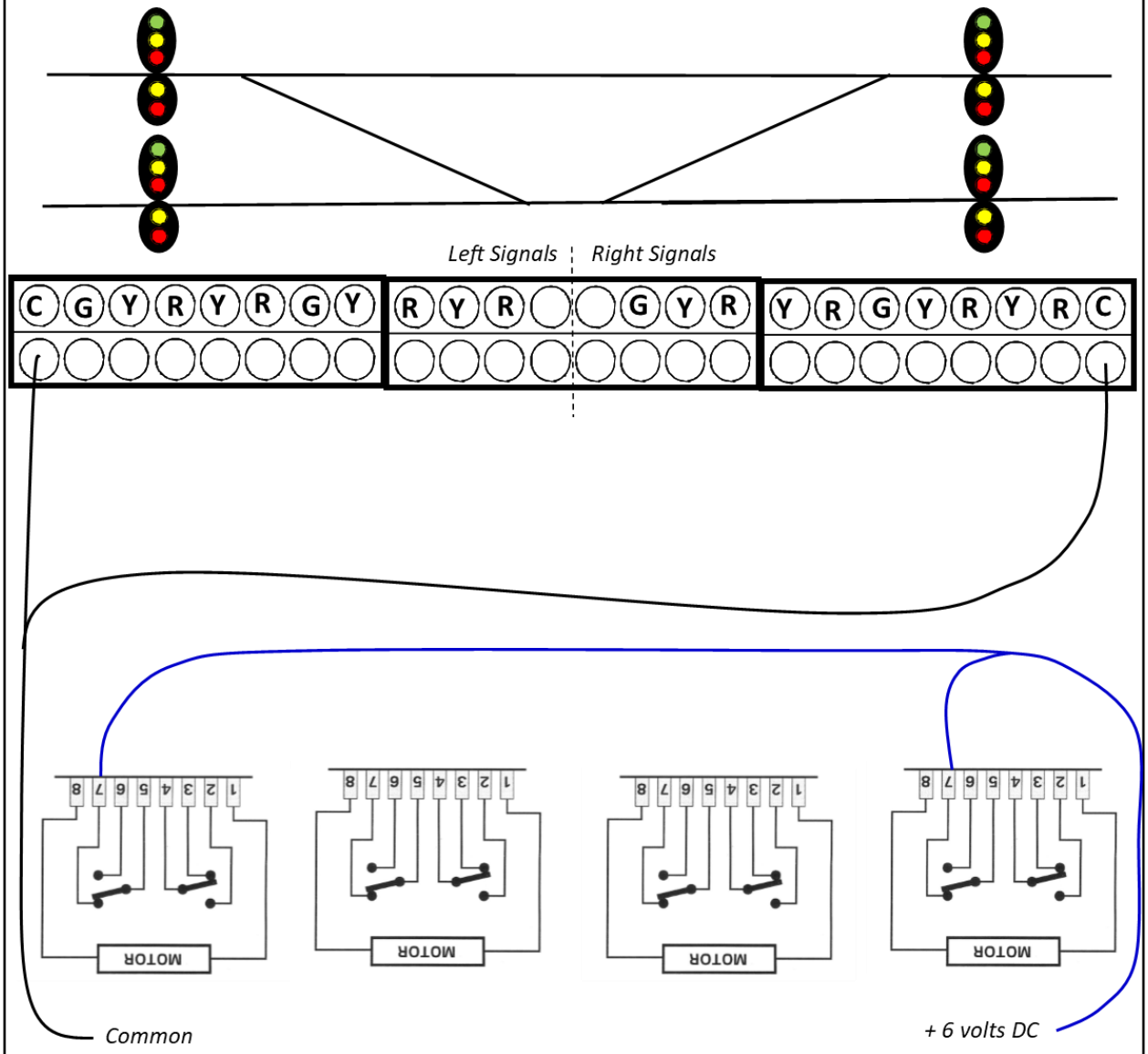

On these drawings the signal heads read top to bottom and the corresponding terminal strips read from left to right.

This second diagram shows the wiring that lights the appropriate signals when all the turnouts are closed. It acts to check that both crossovers are closed, and if they are, sends power to the signal heads indicating clear straight-through routes for both tracks.

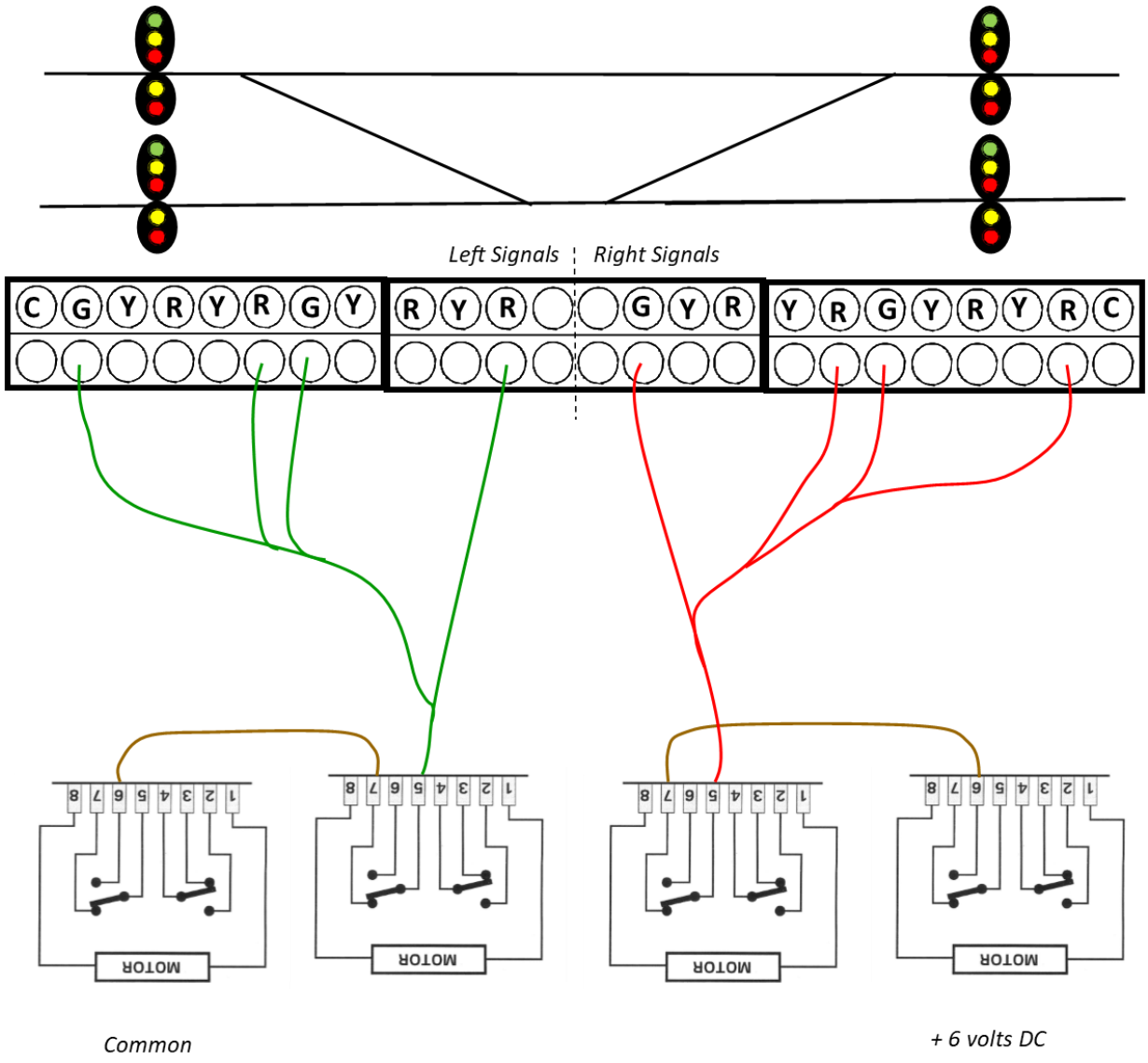

Please note the connections for the turnout positions between terminals 5 and 6 are reversed for each of the two pairs switch motors controlling each crossover. This is because the turnouts they control face in opposing directions. I order to open the entire crossover one motor throws to the right while the second motor must throw to the left.

The final drawing shows the wiring that lights the appropriate signals when one of the crossovers is open. It assumes that only one crossover will be opened at any one time. When a single crossover is opened it activates all the lights necessary, in all of the signal heads, to indicate a diverging route in both directions.

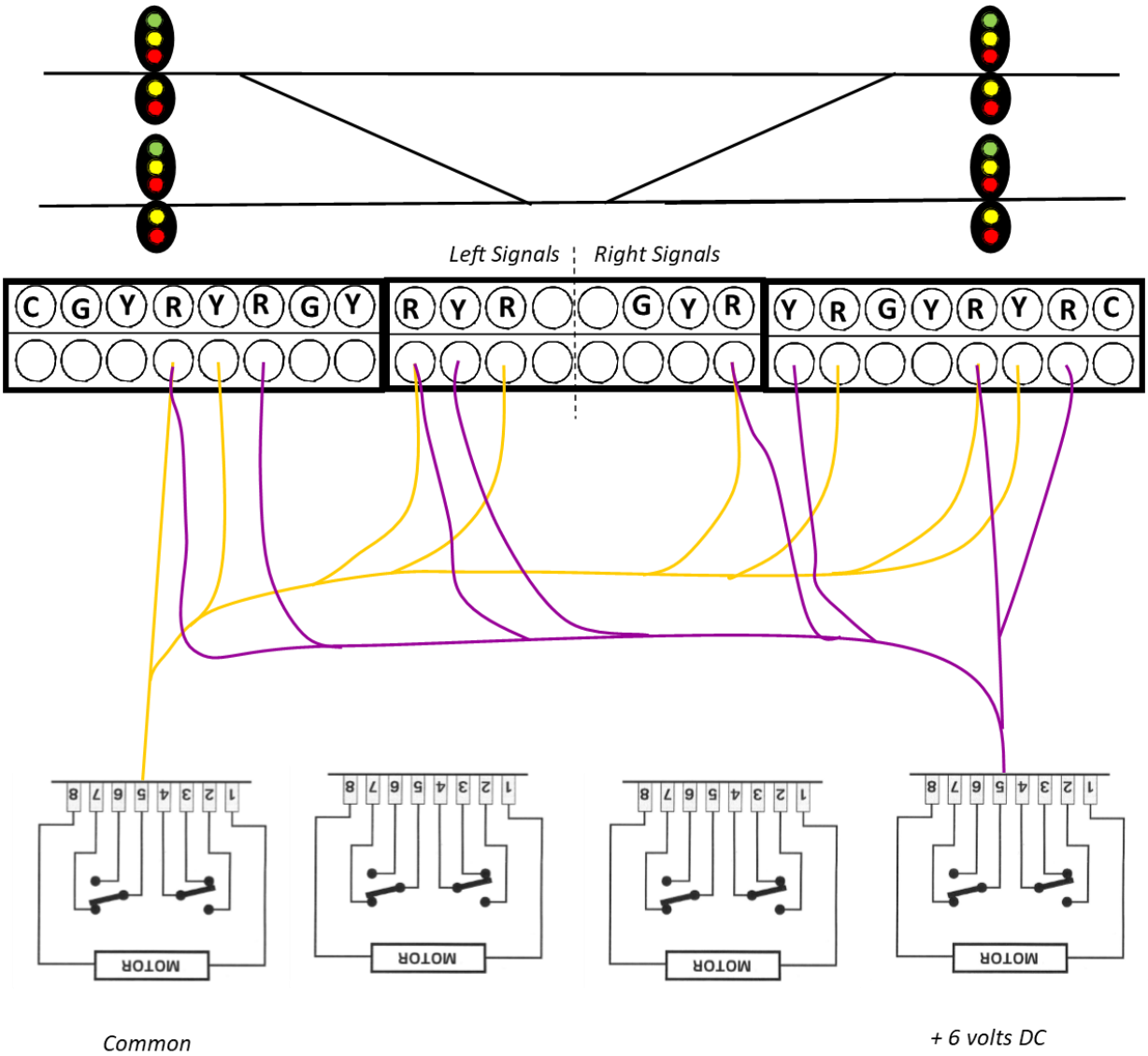

Again, please note the connections for the turnout positions between terminals 5 and 6 are reversed for each of the two pairs switch motors controlling each crossover. This is because the turnouts they control face in opposing directions. I order to open the entire crossover one motor throws to the right while the second motor must throw to the left.

A coal drag splits the signals as it crosses over to Track 2 at High Bridge. Notice the correct red board displayed on the signal head. At this point of installation, signals wired as instructed thus far would show an approach here. The signals will be made to work more prototypically in a coming installment.

Once you signals are installed and lighted, go ahead and enjoy them a while. It's a lot of fun to operate trains on a model railroad with lighted signals. I operated the Lakeside Lines for more than two years with the signals working like this. I used the time to ponder my next move in making my signals operate more like the real thing. You should as well.

You can continue the journey with me into simple logic point signaling, however, you can just as easily decide to go with one of the many computer based signal operating systems out there. All of the work done to this point will be useful either way. It's a decision that shouldn't be rushed. Whichever you decide to do, your signals are set to go, your switch motors are in place for future dispatcher control, extra contacts are available on the switch motors to deliver the system routing information, and the terminal strips are ready for more advanced wiring.

When you are sufficiently recovered form all this wiring to have an appetite for an even more complex wiring, it will be time to move on to the third phase of this installation. No rush, keep it fun.

Midland Atlantic
Anthony Parrish, CEO
tony765@aol.com

Norfolk and Western
Pipestem Basement Division (HO)
Dan Mulhearn
304-466-9188
danmulhearn@gmail.com

THE CRUSTY ROAD
CRUSTY MOUNTAIN AND WILOBY SPRINGS R.R.
Mark Maynard, President
Portsmouth, OH

CRESCENT VALLEY
Jerry Doyle, President
Barboursville, WV

Three Arrows Railroad
Tony Puccini, President
6 Garwood Drive Huntington, WV 25705
puccinibaj@hotmail.com

Pennsylvania Southern
Bob Weinheimer, President
398 Mount View Drive Charleston, WV 25314
www.pennsylvaniasouthern.com

LAKESIDE LINES RAILROAD
Thomas K. Harris, President and CEO
274 S. Wye Rd., Wytheville, VA 24382
tharris@va.net
(276)620-3493
www.lakesidelines.com

Boone Dock, Goat Head & Chug Water Western Railway & Navigation Co.
Ed Keith, MMR
Assistant Superintendent
Chesapeake, OH

Reading lines
SHAMOKIN DIVISION
DENNIS MCGEENEY ROAD FOREMAN
SUMMERSVILLE, WV
304-872-7262

C and O
HINTON DIVISION
Gary Burdette - Superintendent
Point Pleasant WV

WM
WESTERN MARYLAND RAILWAY
THOMAS SUBDIVISION
RUSSEL MILLER - SUPERINTENDENT
RUSSEL22@MSN.COM

C and O
NEW RIVER GORGE SUBDIVISION
Clint Foster Superintendant
Ronceverte WV

Alleghany & New River Road
An Appalachian Coal Hauling Railroad set in the 50's

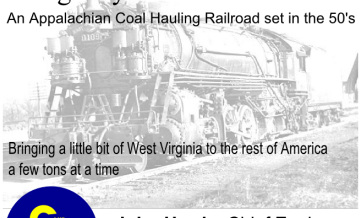

John Harris, Chief Engineer
AandNRR@aol.com

West Virginia & Atlantic Railroad
www.dewv.edu/center-railway-tourism
Davis&Elkins College
LEADING THE WAY

Robert Weinheimer MMR
398 Mount View Dr
Charleston WV
25314-1041

If you received this newsletter via the US Postal Service and have an email address, please let us know so we can save printing and postage costs. Send a note to editor@coaldivision.org to get onto the email distribution list for Up The Holler.

Upcoming Coal Division Events

March 9
St. Albans Depot

April 13
St. Albans Depot

May 18
Steel is King
Parkersburg, WV

June 8
Railfan Trip?